THE MOBILE DISPOSAL SYSTEM FOR
A FLEXIBLE STATIONARY APPLICATION

MobiPress

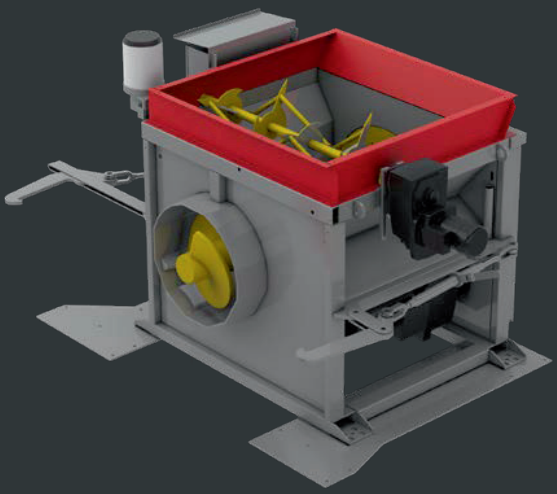

H&G MobiPress

Next generation waste disposal logistics

The H&G MobiPress is the evolution of the self-pressing container: Mobile, flexible and designed for stationary use.

Thanks to the universal adapter design, the installation variant can be determined and changed again and again.

All options are available: from ground-level loading, ramp loading to loading with a lift and tilt unit.

All system components are assembled according to our innovative plug-and-play principle. This means that the screw compactor is installed fast and ready to plug in.

Benefit from the variability of the H&G MobiPress and generate filling weights that are twice as high compared to conventional disposal systems.

The mobile disposal system for flexible, stationary use: the H&G MobiPress provides a comprehensive solution for the requirements of waste disposal logistics.

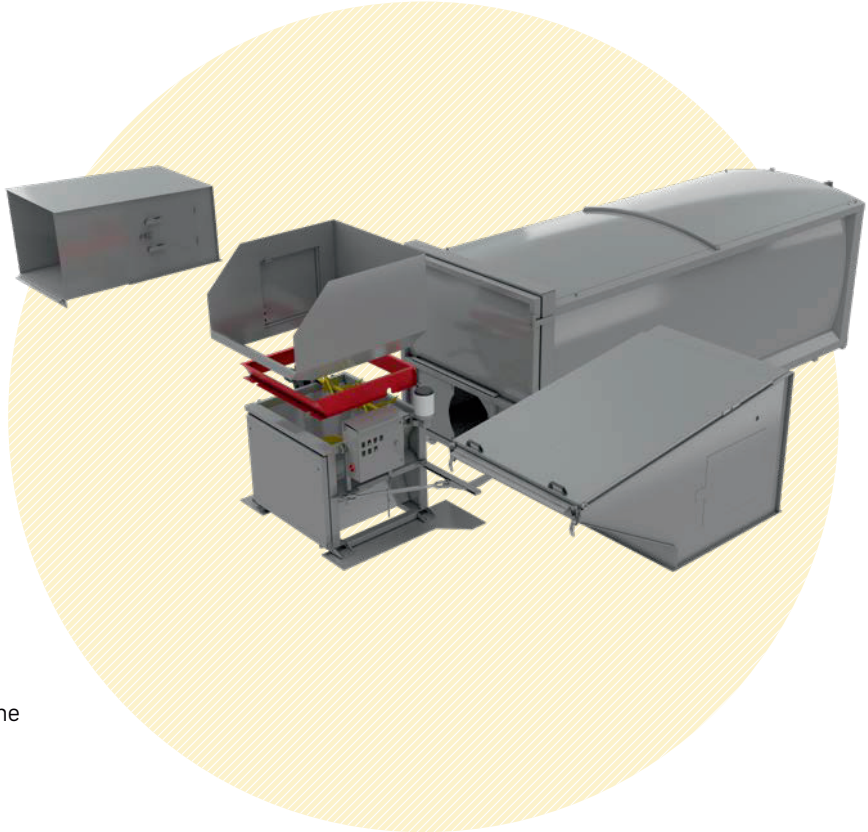

Benefits

For mobile applications:

- Fusing of the machine technology with only 32A
- Control system firmly mounted to the screw compactor – plug-and-play design
- Plug-and-play design of all machine components
- Bottom plate made of steel at the screw compactor (quick assembly and disassembly)

For reducing your disposal logistics by 50%:

- 6 tons filling weight in a 31 m^3 container
- Two to three times more filling weight than with conventional disposal systems
- 50% reduction of CO^2

ALL AT ONE GLANCE

Model types

Fraction
mixed waste & foil

Fraction
cardboard

STANDARD CONFIGURATION (both variations)

- Control with heating element (fixed to the screw compactor)
- Smart control technology
- Remote control with 5 m cable
- 7,5 kW motor suitable for 32A connection
- Central lubrication at the screw compactor
- Steel plate for fixing the machine to concrete or paving

CHARACTERISTICS (both variations)

Compaction / Filling weight	6 t
Housing dimensions	1.650 x 1.500 x 1.300 mm
Installation surface	10.000 x 3.500 mm
Drive	7,5 kW-10 UpM

Electric connection and fusing with 32 A in a plug-and-play design

SMART CONTROL TECHNOLOGY

The multifunctional, digital disposal solution

Smart control technology is the perfect addition to your disposal logistics and adapts to your preferred disposal process.

This means that pre-full and full level messages are not only sent to the operator, but also to the waste disposal company responsible allowing an advance planning of the container change.

Thanks to the GSM connection of the smart control technology the system can be accessed online from anywhere in the world. Your dashboard shows you the status and all current messages of the system at all times.

Advantages

Automated fill level messages: disposal company and operator are informed simultaneously via pre-full and full messages.

Worldwide remote service: our service team has online access to the machine status and can rectify error messages via remote maintenance. You save valuable time and costs.

Live support: support for users - e.g. with the setting of filling levels or time parameters - or transferring new program functions online in just a few minutes.

Efficient maintenance: machine operating hours and throughput quantities of the machine can be sent to operators and service technicians for better planning and scheduling.

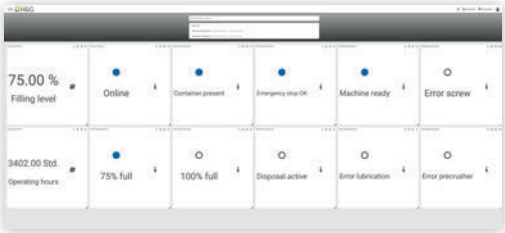

ALL-OUT SOLUTIONS

Mobile lift-and-tilt unit

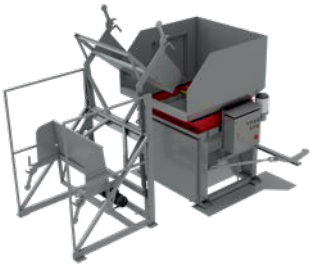

Waste and recyclables shall first be collected centrally before compacting? Our mobile lift-and-tilt units are the perfect addition to your disposal logistics. No matter if DIN container or special container (subject to certain modifications): this additional accessory will provide you with full flexibility for any type of installation on site.

Adaptor plate

The adaptor plate is the perfect addition to your existing containers which have an opening that is different from the screw compactor.

Your benefit: you can easily integrate our mobile disposal system into your disposal logistics and use the existing containers.

Roll-on/ Roll-off container

The roll-on/off container is coupled to the screw compactor as a mobile unit and is quickly and easily uncoupled again for disposal. The press opening for the screw compactor is located in the single-wing rear door.

The H&G roll-on/off container (31 m^3 volume) also adapts to your requirements for flexibility in waste disposal logistics:

- Classic roll-on/off container with fixed steel roof
- Roll-on/off with winch roof

For universal use in your entire waste disposal logistics.

INSTALLATION VARIATIONS

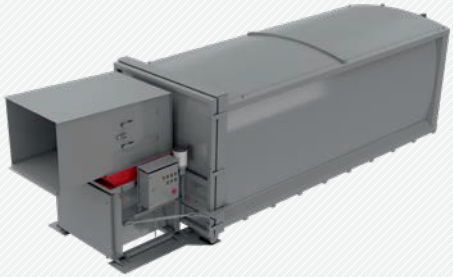

Installation for floor level loading

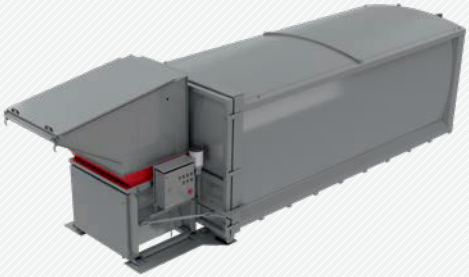

Installation for loading via ramp

Installation for floor level loading with lift-and-tilt unit

Floor level loading with lift-and-tilt unit

INSTALLATION VARIATIONS

Loading via ramp

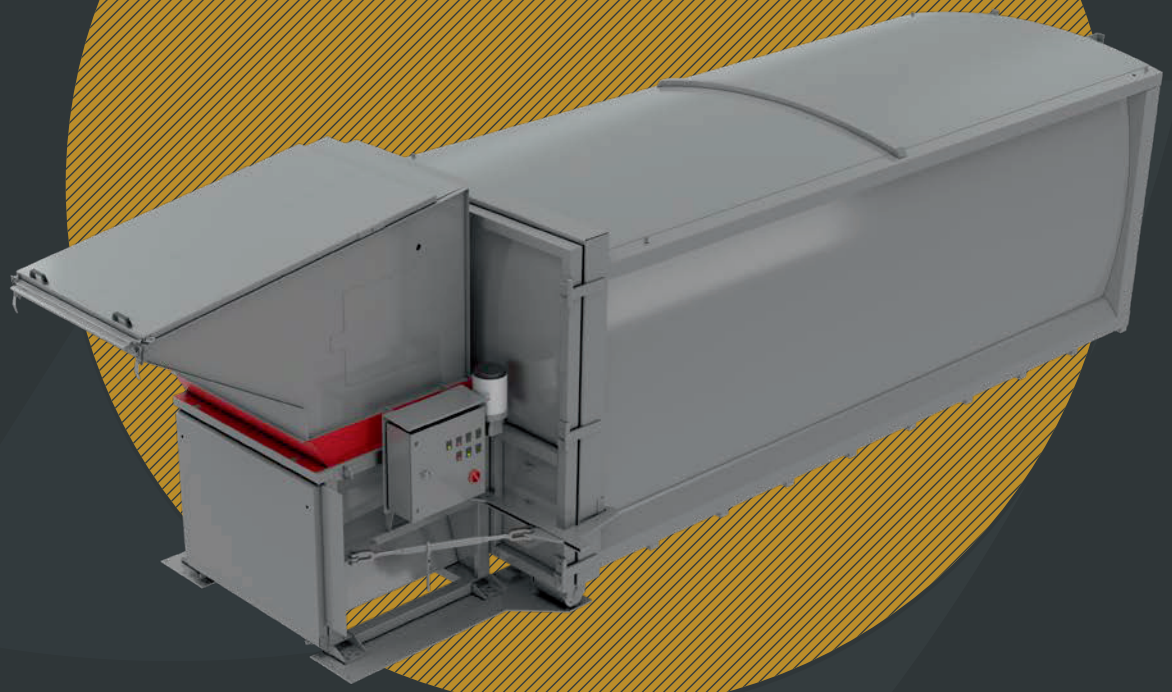

Floor level loading

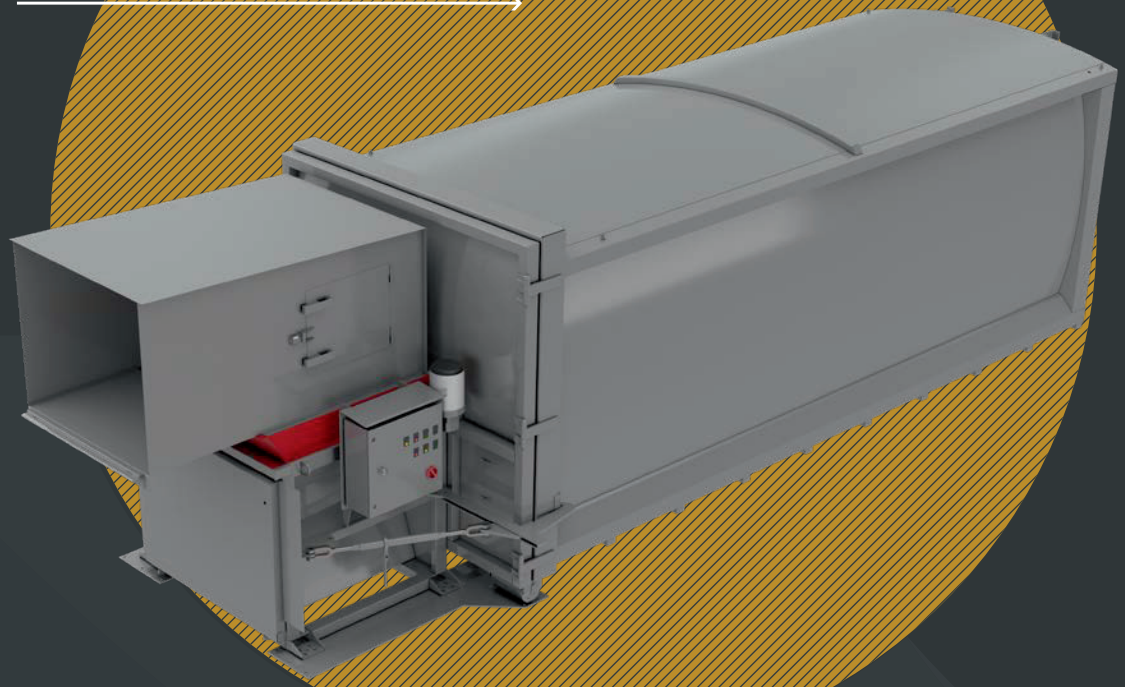

Inspired Steelcraft

made in Germany around the world

Reprezentant in Romania:
SC EUROSTART SRL
Contact: dipl. ing. Bogdan Morcovescu
M: +40-(0)728-144.771
Mail: echipamente@eurostart-oradea.ro

H&G Entsorgungssysteme GmbH
Lützelner Straße 46 • D-57299 Burbach (Germany)
Phone: +49(0)2736/5096-0
info@hg-systems.com
hg-systems.com